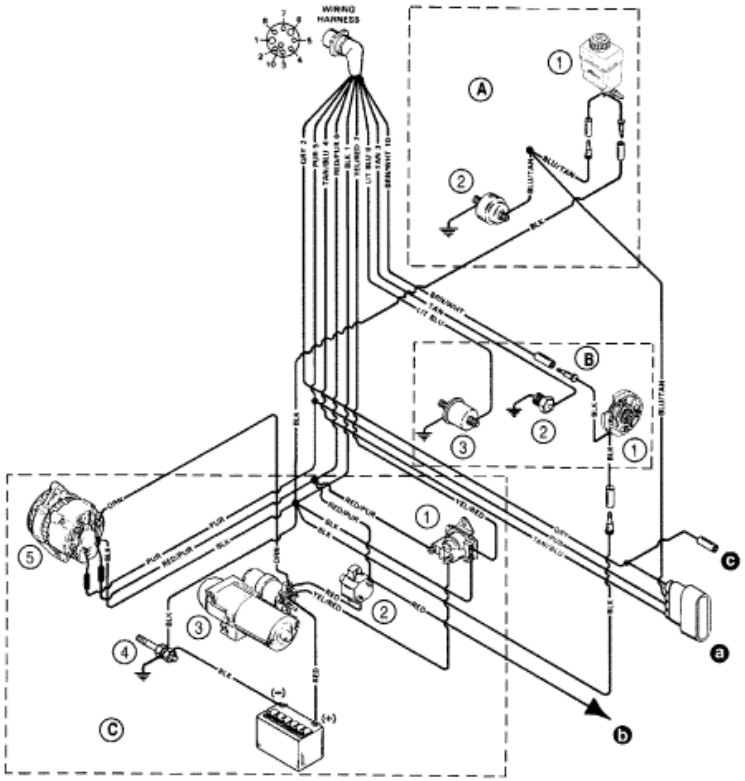


**A–AUDIO WARNING SYSTEM**
1 - Drive Unit Oil Level
2 - Oil Pressure Switch
**B–INSTRUMENTATION SYSTEM**
1 - Trim Sender
2 - Water Temperature Sender
3 - Oil Pressure Sender
**C–CHARGING AND STARTING SYSTEM**
1 - Starter Slave Solenoid
2 - Circuit Breaker
3 - Starter
4 - Ground Stud
5 - Alternator

A - Charging And Starting Circuit
B - Audio Warning/Power Reduction Circuit
C - Instrumentation Senders

a - Harness Connector To Efi System Harness
b - Positive (+) Power Wire To Efi System Harness
c - Auxiliary Tachometer Lead

**Parts List**

| Ref | Class | Part | Description | Qty | Comment | Footnote |
|---|---|---|---|---|---|---|
| - | 84 | 806656A 6 | WIRING HARNESS-ENGINE | 1 | | |